REV	DESCRIPTION	DATE	APPROVED
1	Initial Release	05/02/2018	DJD
2	Title Block - Address & Misc.	25/05/2021	MJRM
3	Title Block Revision	19/01/2026	MAL
4	Model UPDATED	21/01/2026	MAL

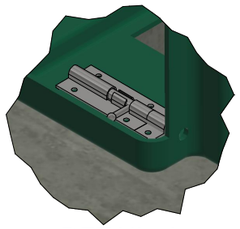

DETAIL A
Sliding Bolt Lock
2no

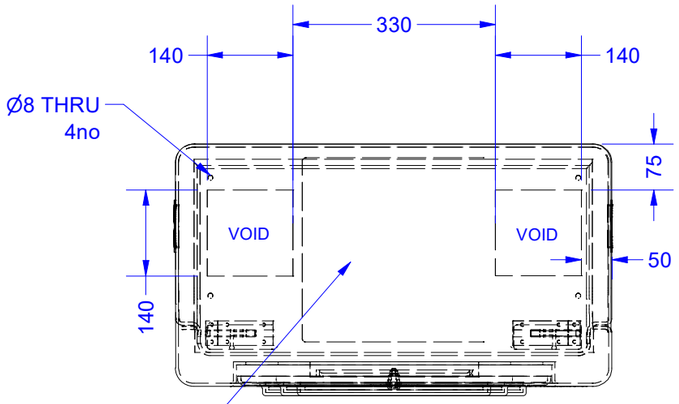

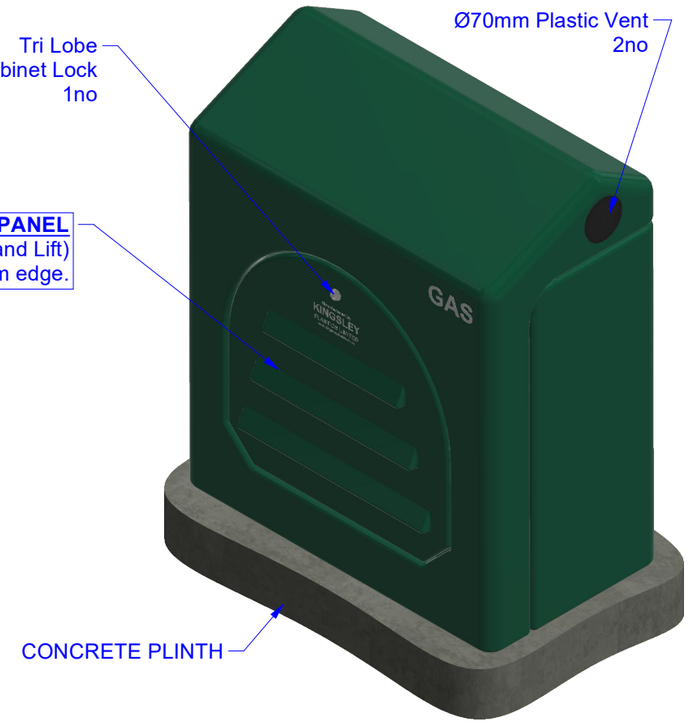

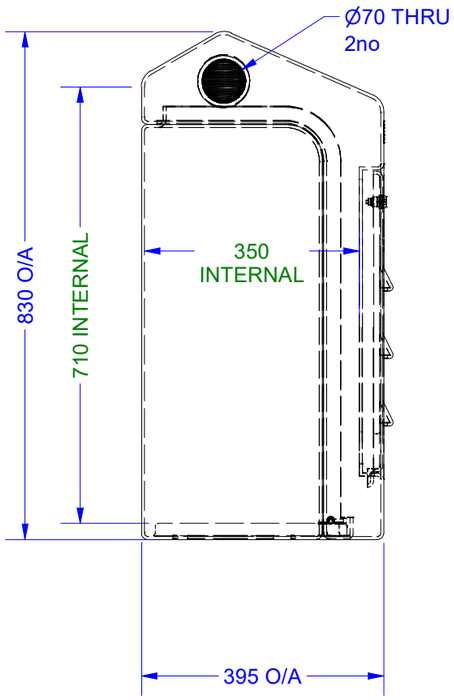

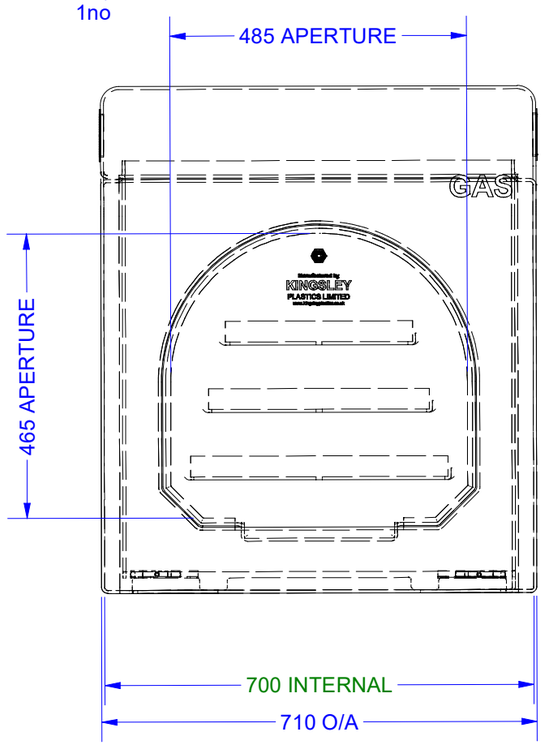

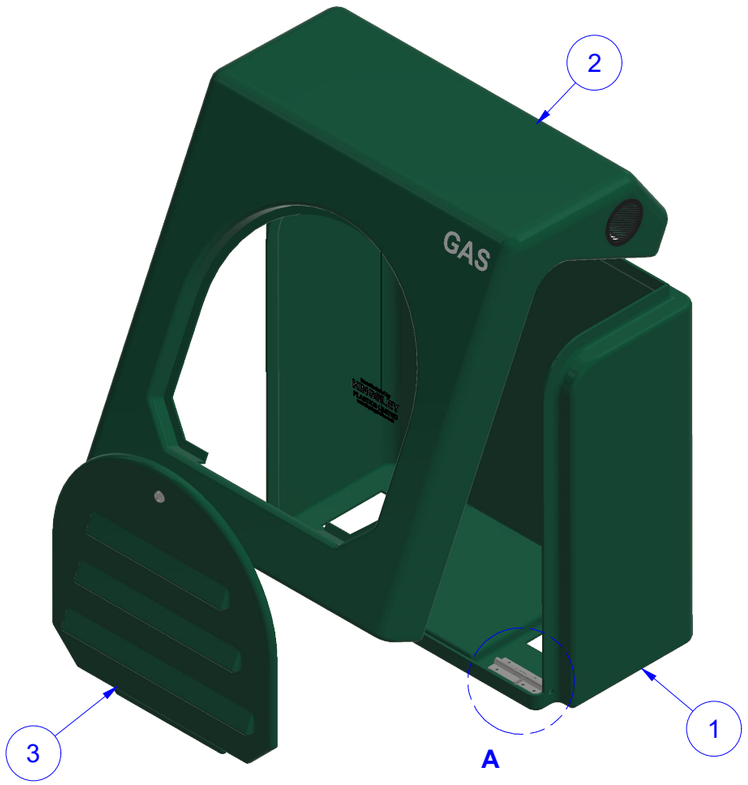

Kingsley Plastics Limited,
The Airfield, Winkleigh,
Devon, EX19 8DW

T:01837 83154

www.kingsleyplastics.co.uk

CABINET DETAILS		
Surface Finish	Exterior Colour	Interior Colour
Smooth	RAL 6005	RAL 6005

Specification Summary:

Construction:
3pc (Single Skin)

Overall Lock Specification Summary:
1/4 Turn - Tri Lobe Cabinet Lock

Ventaltion Specification Summary:
Louvered Door

Roof Type:
Angled

Drawing Title

GC2 : GRP Cabinet
FREE STANDING - General Assembly

Customer Details:

Customer: -
Project Name: -
Customer Ref: -
Works Order No: -

Optional Extras:

- Other Colours Available on Request
- Hasp & Staple Lock [St/St] Alternative
- PRS35 Specification
- Supports U16 Meter
  - Low & Medium Pressure

3rd Angle Proj.

General Manufacturing Tolerances:
Millimetres
LINEAR:
0-500mm +/- 1.0mm
500-2000mm +/- 1.5mm
2000mm + +/- 3.0mm

	W	D	H
Internal Size (mm):	700	350	710
External Size (mm):	710	395	830

Filename: GC2-FS_Assm-04_D.dwg

Drawn By: M.A.Lilley Date: 21/01/2026

Approx Weight (Kg): 15.000 Current Rev: 4

THIS DRAWING IS A PRIVATE AND CONFIDENTIAL COMMUNICATION AND THE PROPERTY OF KINGSLEY PLASTICS LTD.
IT MUST NOT BE COPIED OR LOANED WITHOUT THE WRITTEN CONSENT OF KINGSLEY PLASTICS LTD. AND MUST BE RETURNED IMMEDIATELY ON COMPLETION OF TENDER OR CONTRACT.

DO NOT SCALE IF IN DOUBT - ASK!!